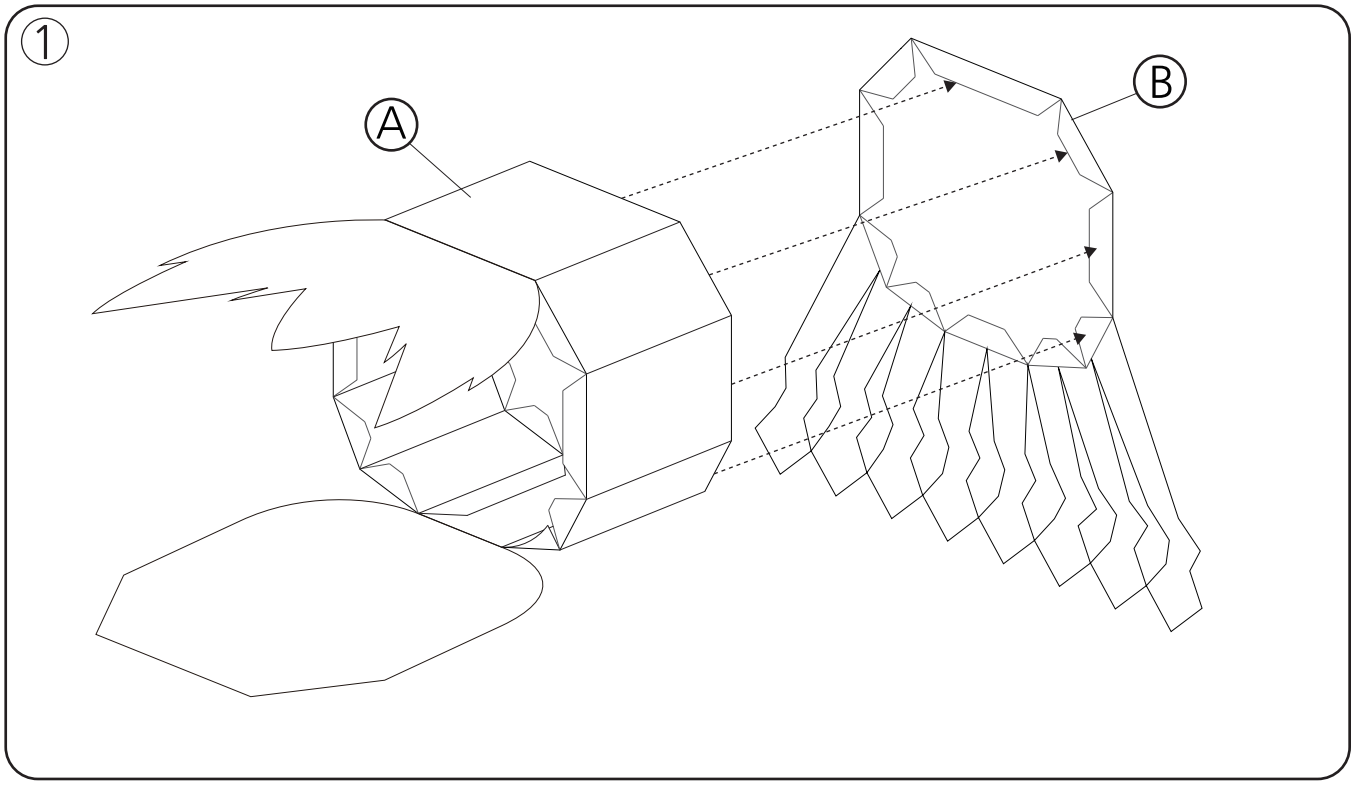
1
A
B

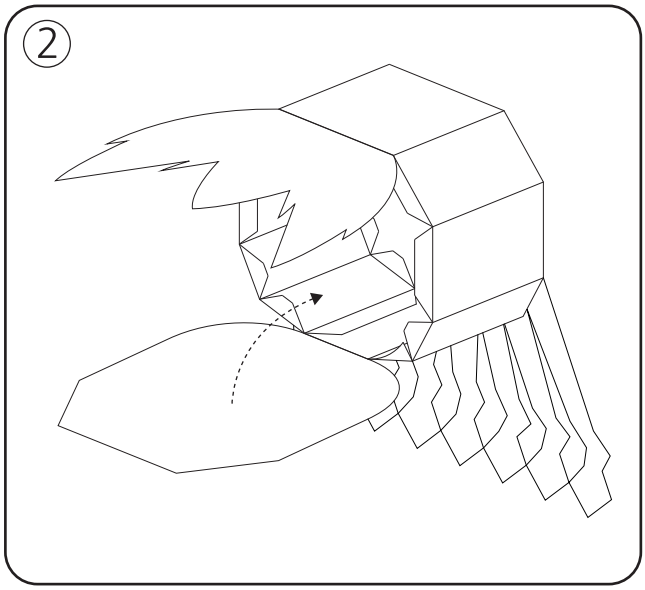
2

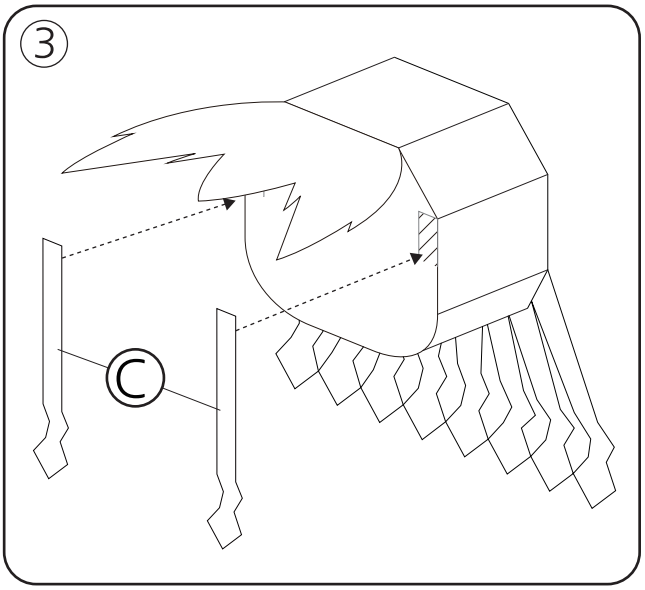
3
C

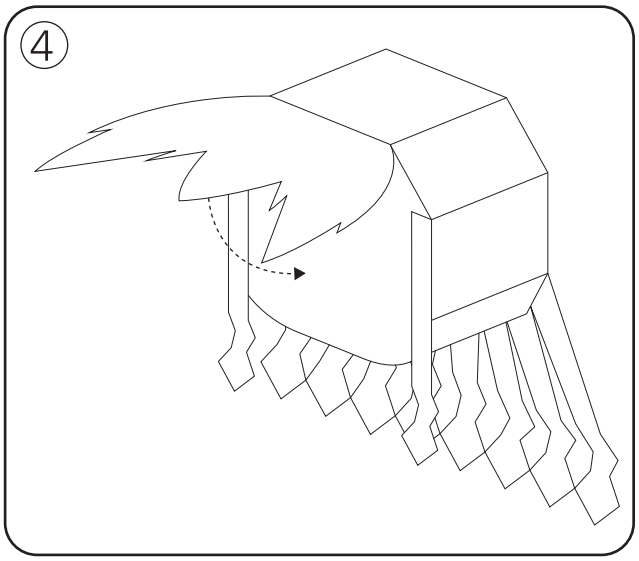
4

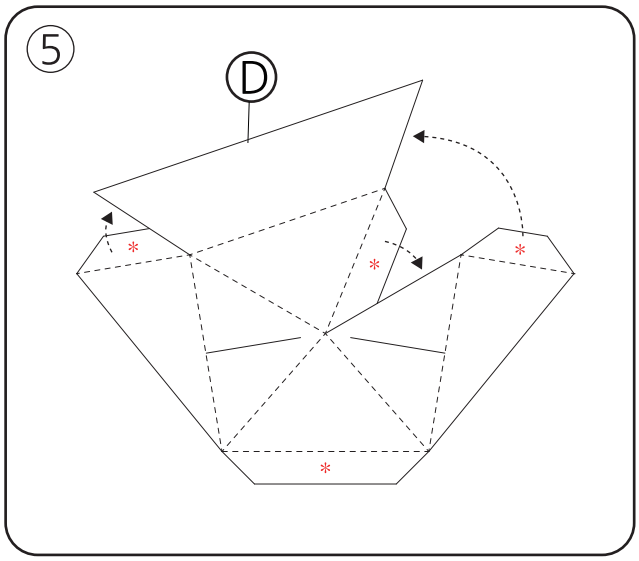
5
D
*
*
*
*

⑥

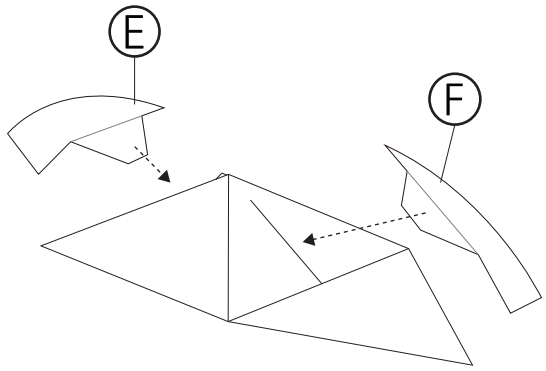

⑦

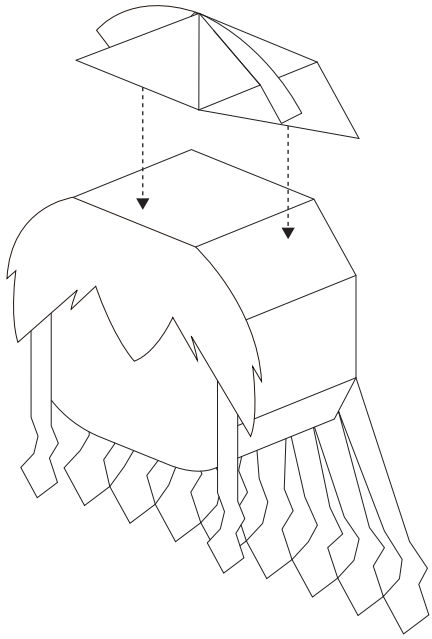

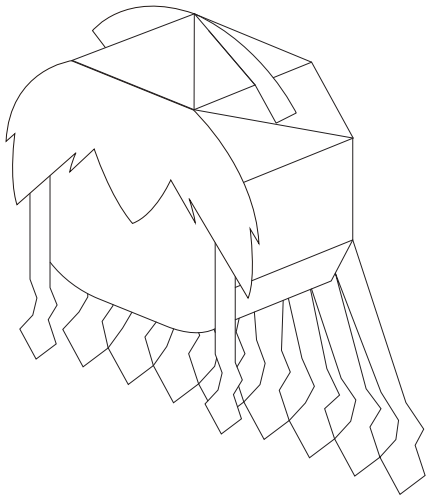

⑧

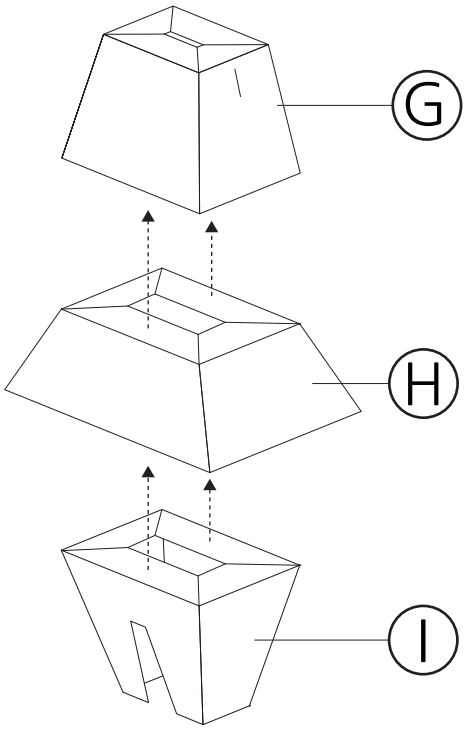

⑨

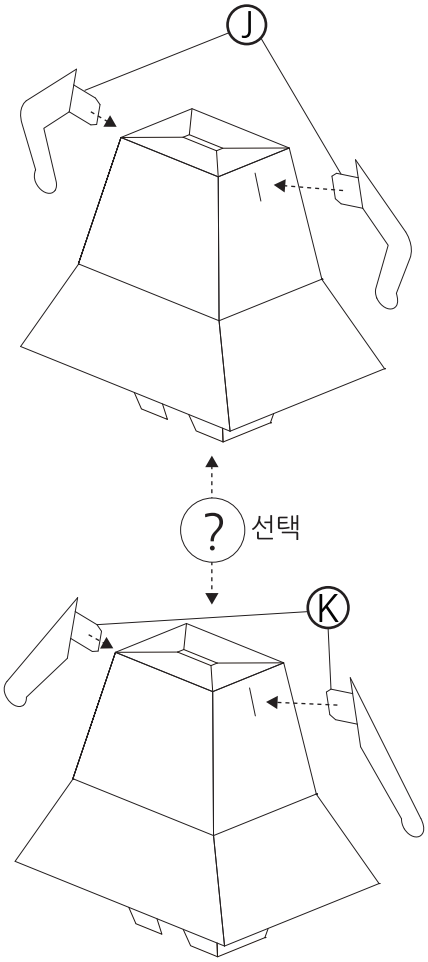

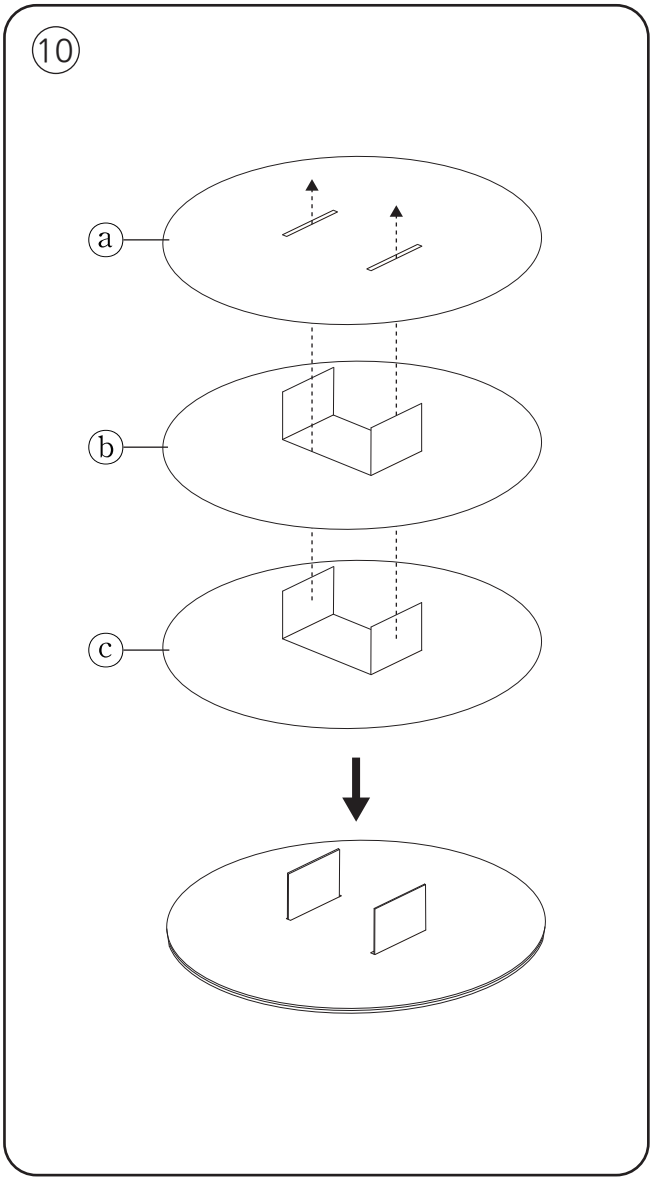

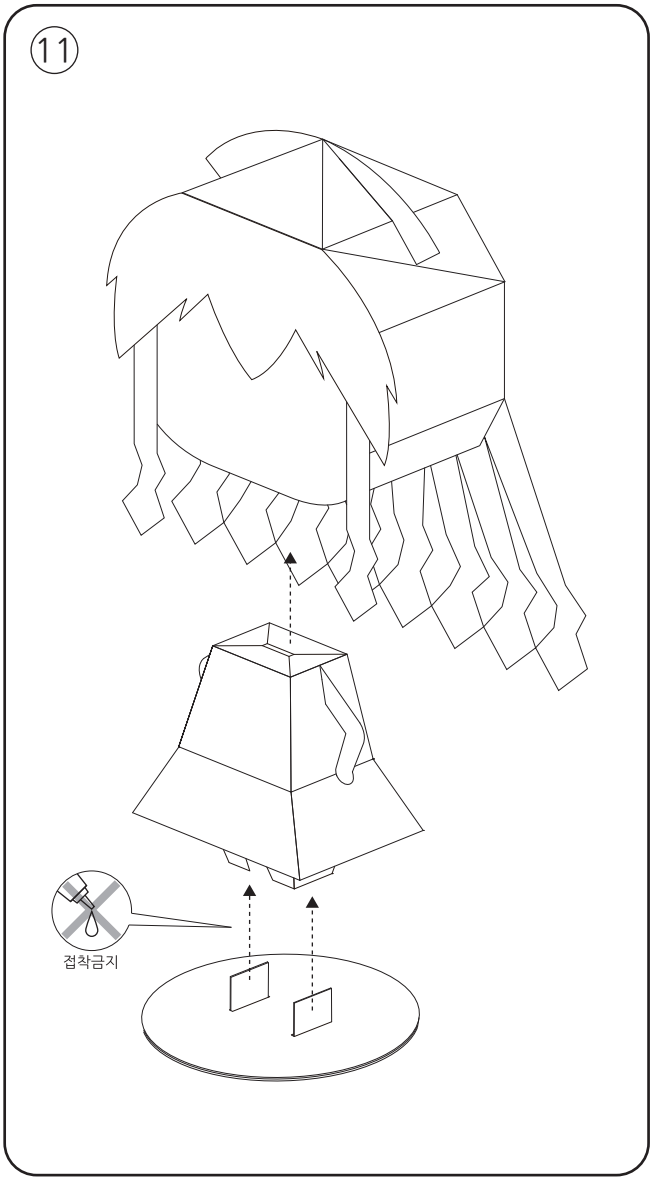

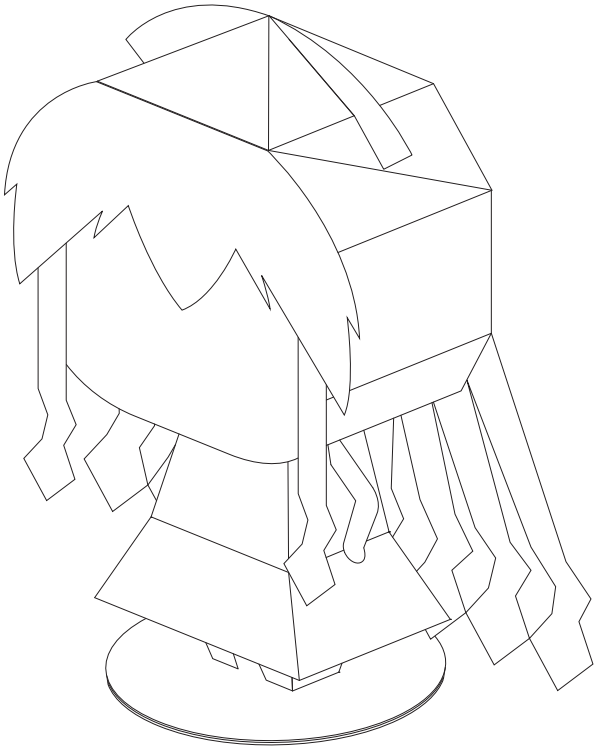

http://poppaper.net/

-Finish-